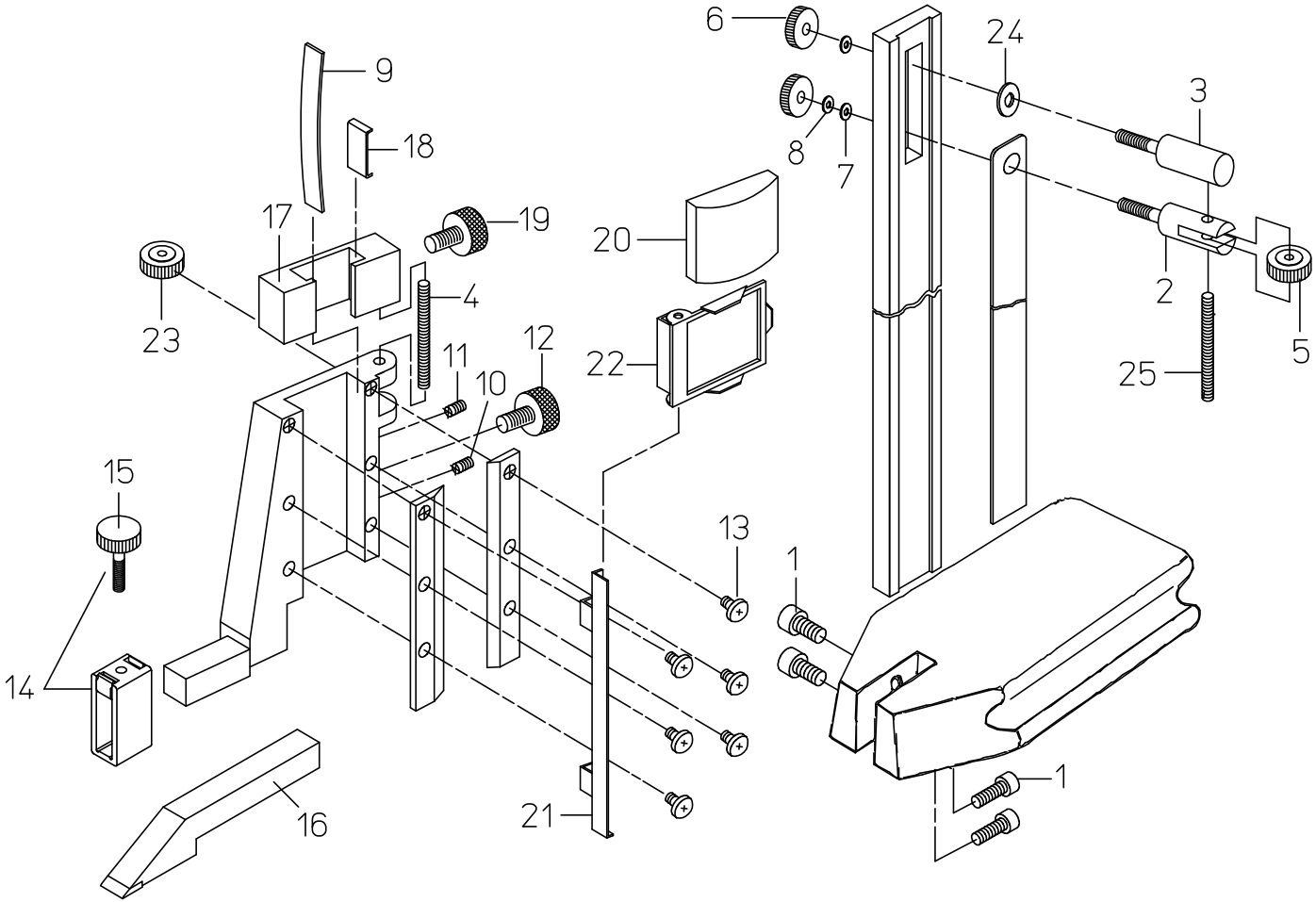

6
24
3
9
18
8
7
17
19
20
2
4
23
5
12
11
22
25
10
15
13
1
14
1
16
21

書類NO, 514-02

KEY NO,	ブヒンメイ	PART NAME	販売区分 CATEGORY	CODE NO, コードNO, 514-167 H6-50	514-164 H6-60	514-162 H6-24"P	514-165 H6-100	514-163 H6-40"P		備考 COMMENTS
1	ﾛｯｶｸｱﾅﾂｷﾎﾞﾙﾄ	SCREW, BASE		111791			124315			
2	ｱﾝﾅｲｼﾞｸ	STUD, BLADE FINE ADJ		101997			121067			
3	ｺﾃｲｼﾞｸ	STUD, BLADE POSITIONING		101996			121068			
4	ｵｸﾘﾈｼﾞ	SCREW, FINE ADJ.		101908			111782			
5	ﾎﾝｼﾞｬｸｵｸﾘｸﾞﾙﾏ	NUT, BLADE FINE ADJ.		101786			101910			
6	ｸﾗﾝﾌﾟﾅｯﾄ	NUT, BLADE CLAMP		101844			140938			
7	ﾜｯｼｬ	WASHER, BLADE CLAMP		101795			111985			
8	ｽﾌﾟﾘﾝｸﾞﾜｯｼｬ	WASHER, SPRING		101796			111986			
9	ｲﾀﾊﾞﾈ	GIB, SLIDER		111820			111821			
10	ｾｯﾄﾈｼﾞ	SCREW, GIB SETTING		101655			111802			
11	ｵｼﾈｼﾞ	SCREW, GIB PRESSING		101654			108058			
12	ｸﾗﾝﾌﾟﾈｼﾞ	CLAMP, SLIDER		101896			111816			
13	ｼﾞｭｳｼﾞﾅﾍﾞｺﾈｼﾞ	SCREW, PLATE		128718						
14	ｽｸﾗｲﾊﾞｸﾗﾝﾌﾟ	HOLDER, SCRIBER		900281			900514			
15	ｸﾗﾝﾌﾟﾈｼﾞ	CLAMP, SCRIBER		101896			111819			
16	ｽｸﾗｲﾊﾞ	SCRIBER		900388			900390			
17	ｵｸﾘﾊﾞｺ	CARRIER		111796			111806			
18	ｵｸﾘﾊﾞｺｲﾀﾊﾞﾈ	GIB, CARRIER		111795			111805			
19	ｵｸﾘﾊﾞｺｸﾗﾝﾌﾟﾈｼﾞ	CLAMP, CARRIER		101888			111817			
20	ﾚﾝｽﾞ	LENS		101791						
21	ﾚｰﾙ	RAIL, LENS FRAME		111797			111786			
22	ﾚﾝｽﾞﾜｸ	FRAME, LENS		905005						
23	ｵｸﾘｸﾞﾙﾏ	NUT, FINE ADJ.		111794			111804			
24	ﾜｯｼｬ	WASHER		129247			-			
25	ﾎﾝｼﾞｬｸｵｸﾘﾈｼﾞ	SCREW, FINE ADJ.		101790			101908			

このリストは、1978年2月より1980年11月までに製造された製品に適用されます。

This parts list is applied to the products produced from February in 1978 to November in 1980.

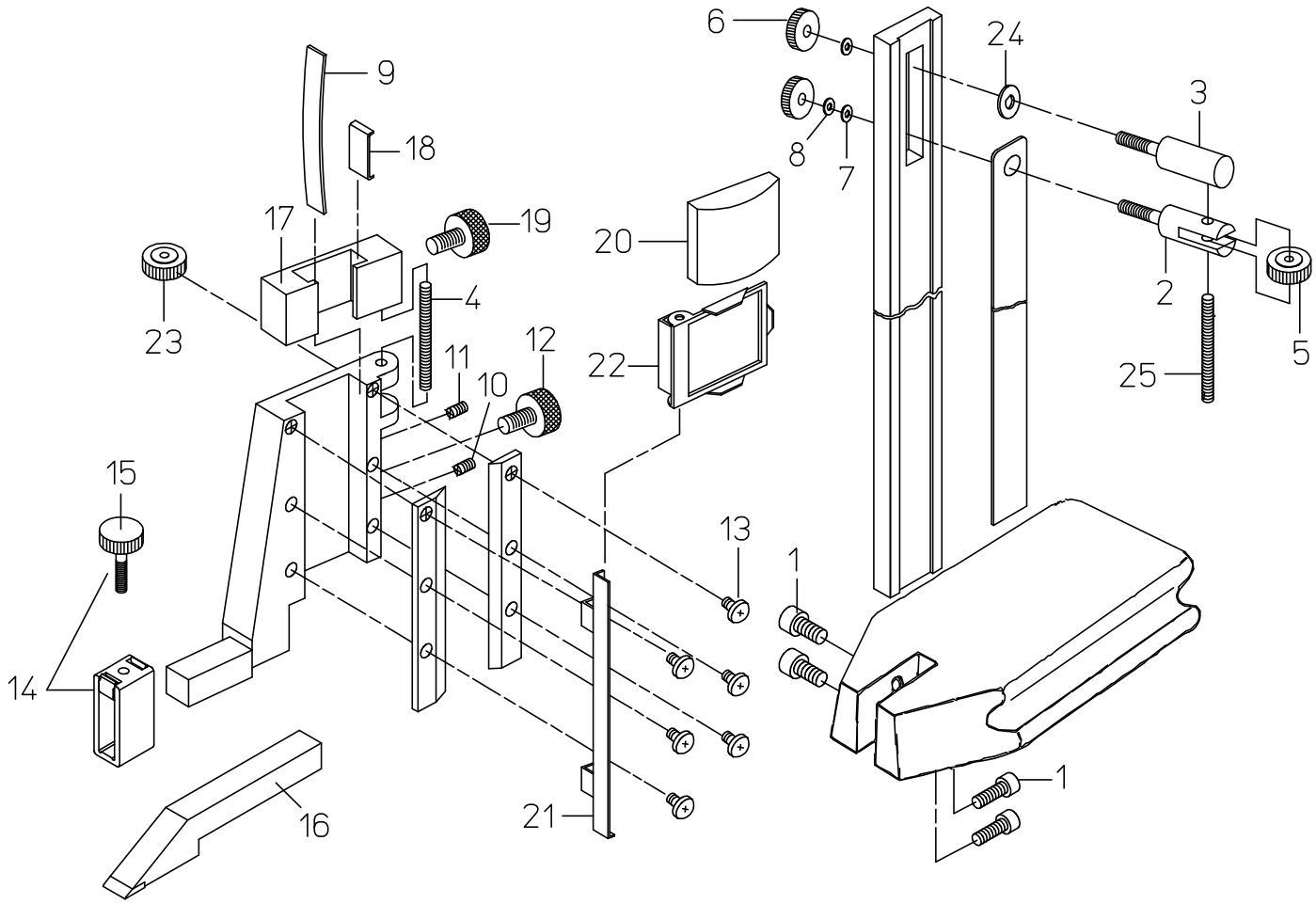

6
24
3
9
18
8
7
17
19
20
2
23
4
5
22
12
11
10
25
15
13
1
14
1
16
21

書類NO, 514-03

KEY NO,	ブヒンメイ	PART NAME	販売区分 CATEGORY	CODE NO, コードNO, 514-160 H6-30 / 514-161 H6-12"P	514-172 H6-45 / 514-173 H6-18"P	514-174 H6-18"P	514-167 H6-50	514-164 H6-60 / 514-162 H6-24"P	514-165 H6-100 / 514-163 H6-40"P	備考 COMMENTS
1	ﾛｯｶｸｱﾅﾂｷﾎﾞﾙﾄ	SCREW, BASE		101854			111791		124315	
2	ｱﾝﾅｲｼﾞｸ	STUD, BLADE FINE ADJ		101997					140939	
3	ｺﾃｲｼﾞｸ	STUD, BLADE POSITIONING		101996					140940	
4	ｵｸﾘﾈｼﾞ	SCREW, FINE ADJ.		101790					134597	
5	ｵｸﾘｸﾞﾙﾏ	NUT, BLADE FINE ADJ.		101786					101910	
6	ｸﾗﾝﾌﾟﾅｯﾄ	NUT, BLADE CLAMP		101844					140938	
7	ﾜｯｼｬ	WASHER, BLADE CLAMP		101795					111985	
8	ｽﾌﾟﾘﾝｸﾞﾜｯｼｬ	WASHER, SPRING		101796					111986	
9	ｲﾀﾊﾞﾈ	GIB, SLIDER		110076			111820		111821	
10	ｾｯﾄﾈｼﾞ	SCREW, GIB SETTING		110077			134574		134576	
11	ｵｼﾈｼﾞ	SCREW, GIB PRESSING		101654					134581	
12	ｸﾗﾝﾌﾟﾈｼﾞ	CLAMP, SLIDER		100951			134583		134585	
13	ｼﾞｭｳｼﾞﾅﾍﾞｺﾈｼﾞ	SCREW, PLATE		128718						
14	ｽｸﾗｲﾊﾞｸﾗﾝﾌﾟ	HOLDER, SCRIBER		901384		905427	905006		905008	
15	ｸﾗﾝﾌﾟﾈｼﾞ	CLAMP, SCRIBER		100951			134583		134614	
16	ｽｸﾗｲﾊﾞ	SCRIBER		900168		900913	900388		900390	
17	ｵｸﾘﾊﾞｺ	CARRIER		101847			134588		134590	
18	ｵｸﾘﾊﾞｺｲﾀﾊﾞﾈ	GIB, CARRIER		101846			111795		111805	
19	ｸﾗﾝﾌﾟﾈｼﾞ	CLAMP, CARRIER		100952			134584		134594	
20	ﾚﾝｽﾞ	LENS		101791						
21	ﾚｰﾙ	RAIL, LENS FRAME		101863			111797		111786	
22	ﾚﾝｽﾞﾜｸ	FRAME, LENS		900169					905005	
23	ｵｸﾘｸﾞﾙﾏ	NUT, FINE ADJ.		101786			134599		134601	
24	ﾜｯｼｬ	WASHER		129247					-	
25	ｵｸﾘﾈｼﾞ	SCREW, FINE ADJ.		101790					134595	

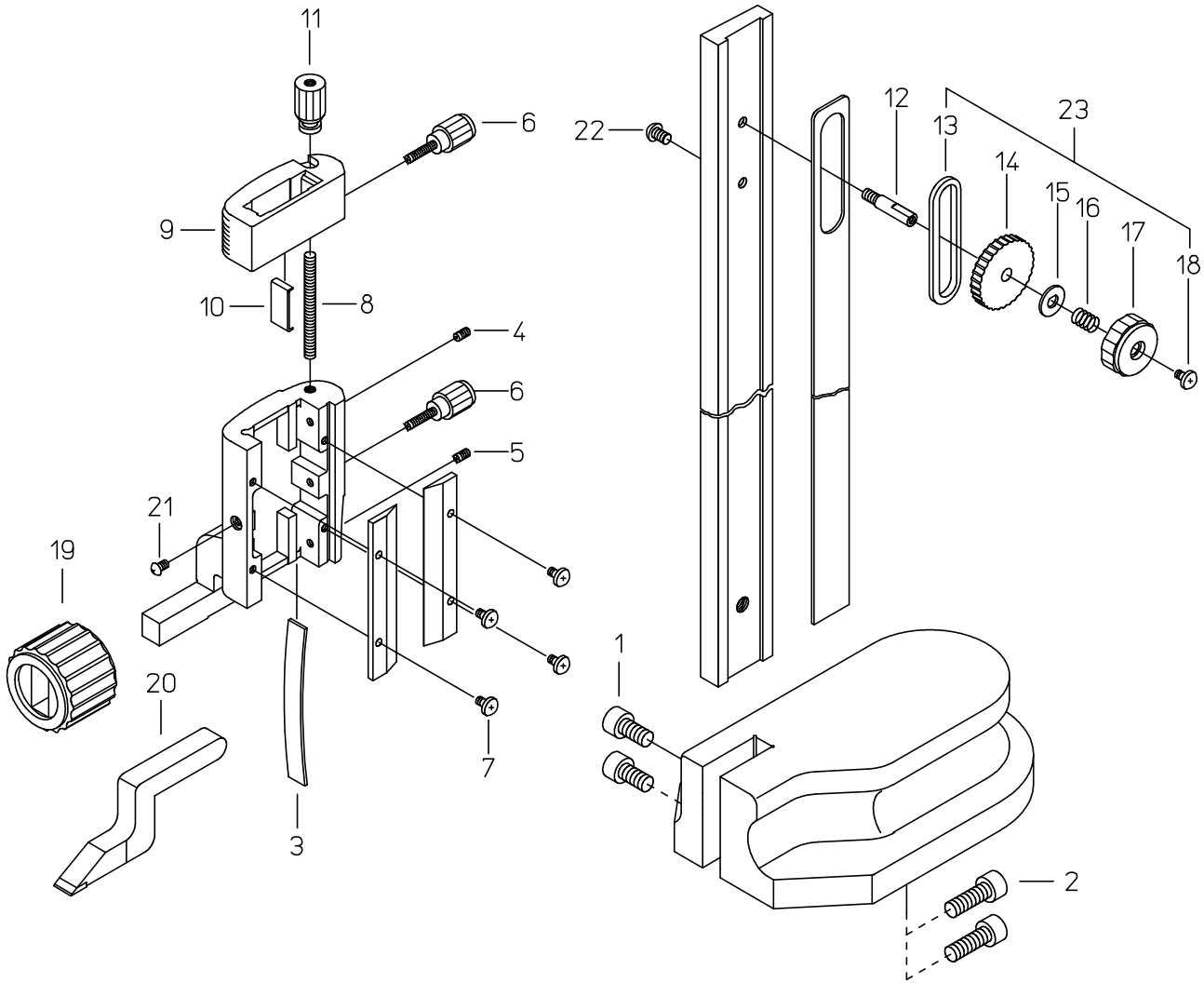
11
6
9
10
8
4
6
5
21
19
20
7
3
22
12
13
23
14
15
16
17
18
1
2

書類NO, 514-04

KEY NO,	ブヒンメイ	PART NAME	販売区分 CATEGORY	CODE NO, コードNO, 514-102 HS-30 / 514-103 HS-12"	514-104 HS-45 / 514-105 HS-18"	514-106 HS-60 / 514-107 HS-24"				備考 COMMENTS
1	ﾛｯｶｸｱﾅﾂｷﾎﾞﾙﾄ	SCREW, BASE		07GAA028		07GAA076				
2	ﾛｯｶｸｱﾅﾂｷﾎﾞﾙﾄ	SCREW, BASE		101619		142006				
3	ｲﾀﾊﾞﾈ	GIB, SLIDER		110076		111820				
4	ｾｯﾄﾈｼﾞ	SCREW, GIB SETTING		110077						
5	ｵｼﾈｼﾞ	SCREW, GIB PRESSING		101654						
6	ｸﾗﾝﾌﾟﾈｼﾞ	CLAMP, SLIDER		07GAA025		07GAA005				
7	ｼﾞｭｳｼﾞﾅﾍﾞｺﾈｼﾞ	SCREW, PLATE		07GAA012						
8	ｵｸﾘﾈｼﾞ	SCREW, FINE ADJ.		134598		134597				
9	ｵｸﾘﾊﾞｺ	CARRIER		07GAA034	07GAA080	07GAA015				
10	ｵｸﾘﾊﾞｺｲﾀﾊﾞﾈ	GIB, CARRIER		07GAA035		07GAA052				
11	ｵｸﾘｸﾞﾙﾏ	NUT, FINE ADJ.		07GAA038		07GAA006				
12	ｼｬﾌﾄ	SHAFT		145890		880158				
13	ﾗｯｸ	RACK, BLADE FINE ADJ.		145889						
14	ﾋﾟﾄﾞｳﾊｸﾞﾙﾏ	PINION. BLADE FINE ADJ.		145891						
15	ﾜｯｼｬ	WASHER		145894						
16	ｽﾌﾟﾘﾝｸﾞ	SPRING		145895						
17	ﾅｯﾄ	NUT, BLADE CLAMP		07GAA040						
18	ｼﾞｭｳｼﾞﾄﾗｽﾈｼﾞ	SCREW, STOPPER		07GAA041						
19	ｽｸﾗｲﾊﾞｸﾗﾝﾌﾟ	CLAMP, SCRIBER		07GZA002						
20	ｽｸﾗｲﾊﾞ	SCRIBER		07GZA000						
21	ｼﾞｭｳｼﾞﾅﾍﾞｺﾈｼﾞ	SCREW		124667						
22	ｼﾞｭｳｼﾞﾅﾍﾞｺﾈｼﾞ	SCREW, STOPPER SLIDER		07GAA087						
23	ﾎﾝｼﾞｬｸｲﾄﾞｳﾌﾟ ｷｯﾄ	KIT NO (BLADE FINE ADJ)		05GZA006						

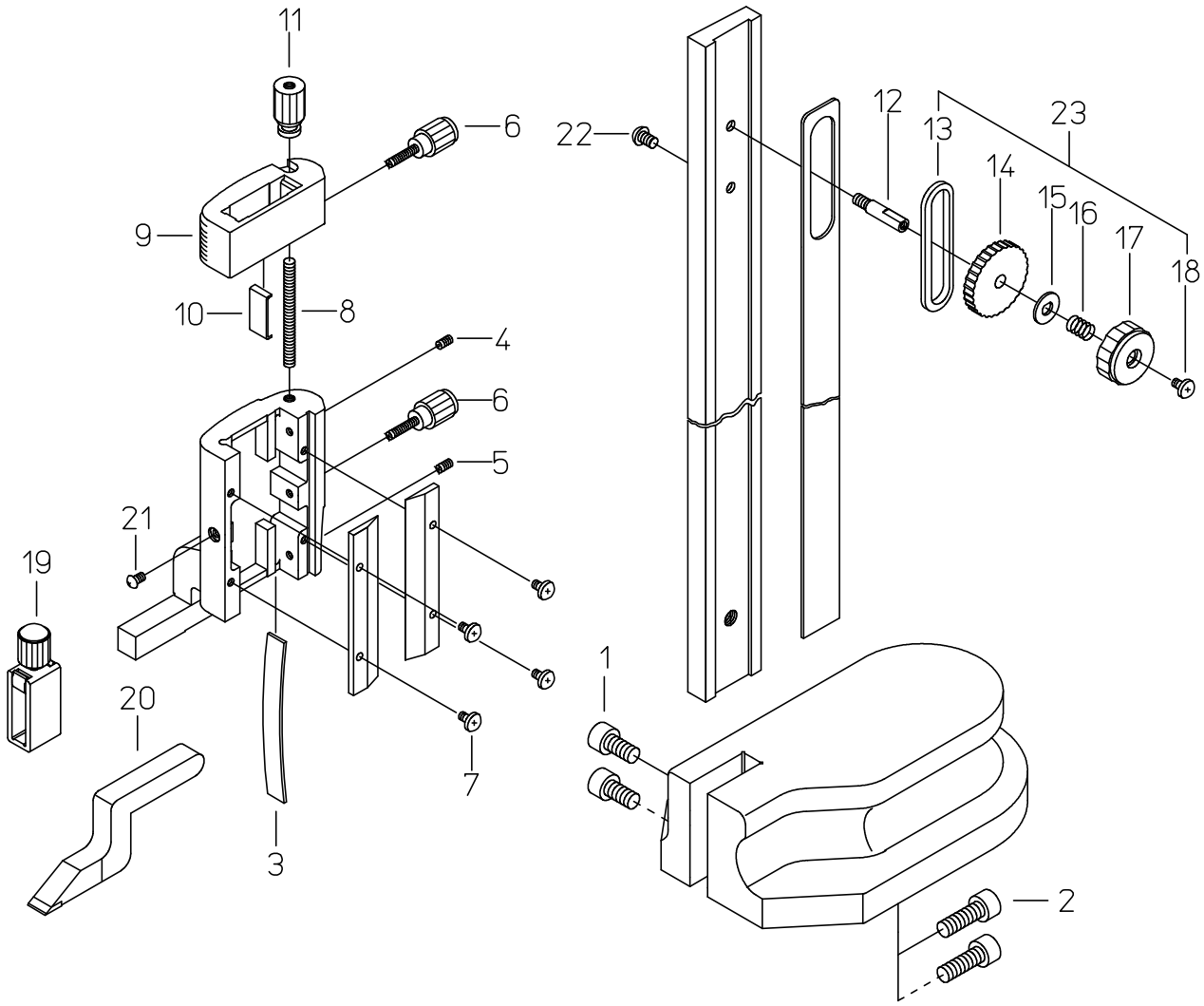
11
6
22
12
13
23
14
15
16
17
18
9
10
8
4
6
5
21
19
20
7
3
1
2

書類NO, 514-04

KEY NO,	ブヒンメイ	PART NAME	販売区分 CATEGORY	CODE NO, コードNO, 514-102 HS-30 / 514-103 HS-12"	514-104 HS-45 / 514-105 HS-18"	514-106 HS-60 / 514-107 HS-24"				備考 COMMENTS
1	ﾛｯｶｸｱﾅﾂｷﾎﾞﾙﾄ	SCREW, BASE		07GAA028		07GAA076				
2	ﾛｯｶｸｱﾅﾂｷﾎﾞﾙﾄ	SCREW, BASE		101619		142006				
3	ｲﾀﾊﾞﾈ	GIB, SLIDER		110076		111820				
4	ｾｯﾄﾈｼﾞ	SCREW, GIB SETTING		110077						
5	ｵｼﾈｼﾞ	SCREW, GIB PRESSING		101654						
6	ｸﾗﾝﾌﾟﾈｼﾞ	CLAMP, SLIDER		07GAA025		07GAA005				
7	ｼﾞｭｳｼﾞﾅﾍﾞｺﾈｼﾞ	SCREW, PLATE		07GAA012						
8	ｵｸﾘﾈｼﾞ	SCREW, FINE ADJ.		134598		134597				
9	ｵｸﾘﾊﾞｺ	CARRIER		07GAA034	07GAA080	07GAA015				
10	ｵｸﾘﾊﾞｺｲﾀﾊﾞﾈ	GIB, CARRIER		07GAA035		07GAA052				
11	ｵｸﾘｸﾞﾙﾏ	NUT, FINE ADJ.		07GAA038		07GAA006				
12	ｼｬﾌﾄ	SHAFT		145890		880158				
13	ﾗｯｸ	RACK, BLADE FINE ADJ.		145889						
14	ﾋﾟﾄﾞｳﾊｸﾞﾙﾏ	PINION. BLADE FINE ADJ.		145891						
15	ﾜｯｼｬ	WASHER		145894						
16	ｽﾌﾟﾘﾝｸﾞ	SPRING		145895						
17	ﾅｯﾄ	NUT, BLADE CLAMP		07GAA040						
18	ｼﾞｭｳｼﾞﾄﾗｽﾈｼﾞ	SCREW, STOPPER		07GAA041						
19	ｽｸﾗｲﾊﾞｸﾗﾝﾌﾟ	CLAMP, SCRIBER		05GZA033						
20	ｽｸﾗｲﾊﾞ	SCRIBER		07GZA000						
21	ｼﾞｭｳｼﾞﾅﾍﾞｺﾈｼﾞ	SCREW		124667						
22	ｼﾞｭｳｼﾞﾅﾍﾞｺﾈｼﾞ	SCREW, STOPPER SLIDER		07GAA087						
23	ﾎﾝｼﾞｬｸｲﾄﾞｳﾌﾞ ｷｯﾄ	KIT NO (BLADE FINE ADJ)		05GZA006						

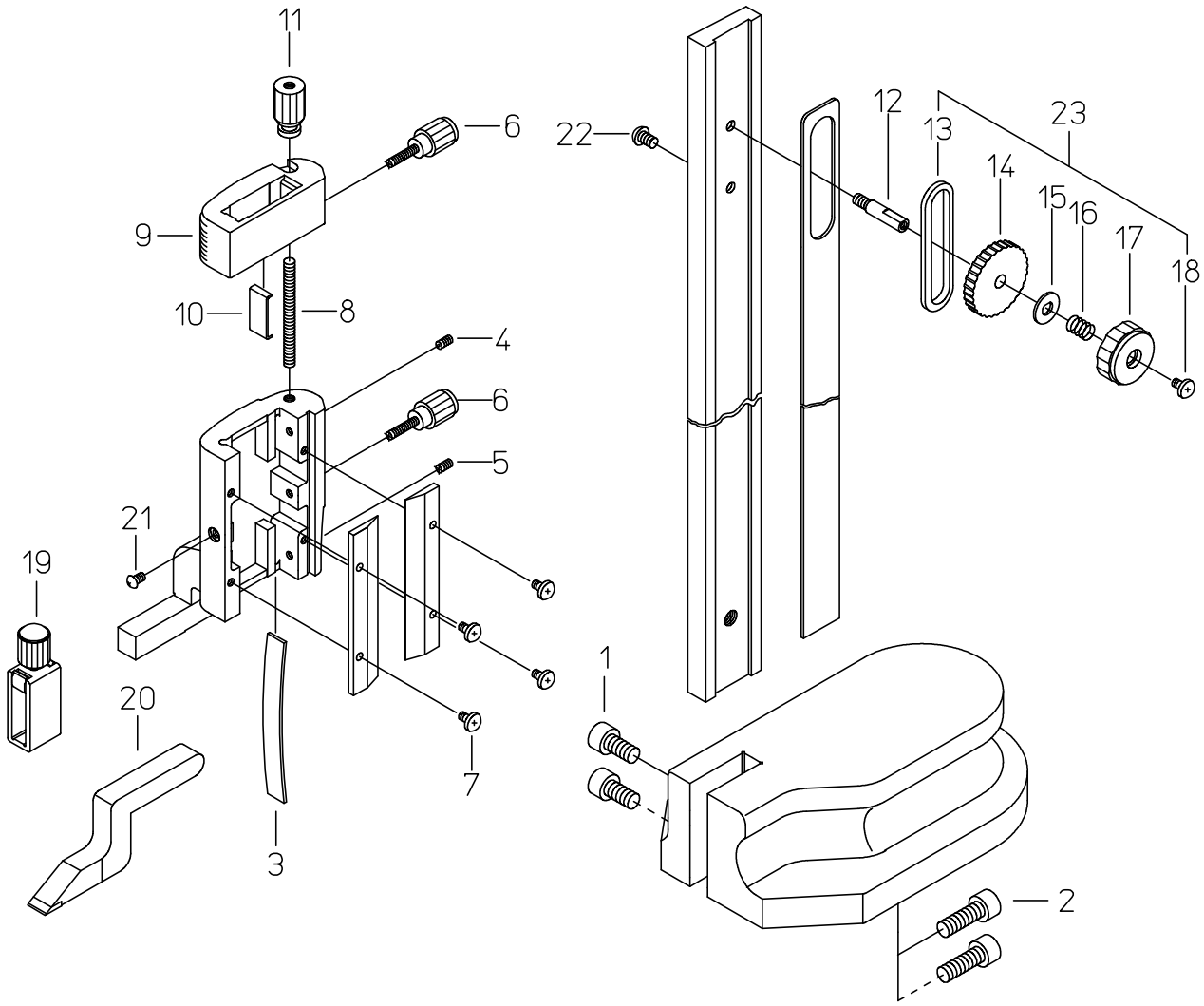
11
6
22
12
13
23
14
15
16
17
18
9
10
8
4
6
5
21
19
20
7
3
1
2

書類NO, 514-04

KEY NO,	ブヒンメイ	PART NAME	販売区分 CATEGORY	CODE NO, コードNO, 514-102 HS-30 / 514-103 HS-12"	514-104 HS-45 / 514-105 HS-18"	514-106 HS-60 / 514-107 HS-24"		備考 COMMENTS
1	ﾛｯｶｸｱﾅﾂｷﾎﾞﾙﾄ	SCREW, BASE		07GAA028		07GAA076		
2	ﾛｯｶｸｱﾅﾂｷﾎﾞﾙﾄ	SCREW, BASE		05GAA051		142006		
3	ｲﾀﾊﾞﾈ	GIB, SLIDER		110076		111820		
4	ｾｯﾄﾈｼﾞ	SCREW, GIB SETTING		110077				
5	ｵｼﾈｼﾞ	SCREW, GIB PRESSING		101654				
6	ｸﾗﾝﾌﾟﾈｼﾞ	CLAMP, SLIDER		05HAA125		07GAA005		
7	ｼﾞｭｳｼﾞﾅﾍﾞｺﾈｼﾞ	SCREW, PLATE		07GAA012				
8	ｵｸﾘﾈｼﾞ	SCREW, FINE ADJ.		134598		134597		
9	ｵｸﾘﾊﾞｺ	CARRIER		07GAA034	07GAA080	07GAA015		
10	ｵｸﾘﾊﾞｺｲﾀﾊﾞﾈ	GIB, CARRIER		07GAA035		07GAA052		
11	ｵｸﾘｸﾞﾙﾏ	NUT, FINE ADJ.		07GAA038		07GAA006		
12	ｼｬﾌﾄ	SHAFT		145890		880158		
13	ﾗｯｸ	RACK, BLADE FINE ADJ.		145889				
14	ﾋﾟﾄﾞｳﾊｸﾞﾙﾏ	PINION. BLADE FINE ADJ.		145891				
15	ﾜｯｼｬ	WASHER		145894				
16	ｽﾌﾟﾘﾝｸﾞ	SPRING		145895				
17	ﾅｯﾄ	NUT, BLADE CLAMP		07GAA040				
18	ｼﾞｭｳｼﾞﾄﾗｽﾈｼﾞ	SCREW, STOPPER		07GAA041				
19	ｽｸﾗｲﾊﾞｸﾗﾝﾌﾟ	CLAMP, SCRIBER		05GZA033				
20	ｽｸﾗｲﾊﾞ	SCRIBER		07GZA000				
21	ｼﾞｭｳｼﾞﾅﾍﾞｺﾈｼﾞ	SCREW		124667				
22	ｼﾞｭｳｼﾞﾅﾍﾞｺﾈｼﾞ	SCREW, STOPPER SLIDER		07GAA087				
23	ﾎﾝｼﾞｬｸｲﾄﾞｳﾌﾟ ｷｯﾄ	KIT NO (BLADE FINE ADJ)		05GZA006				

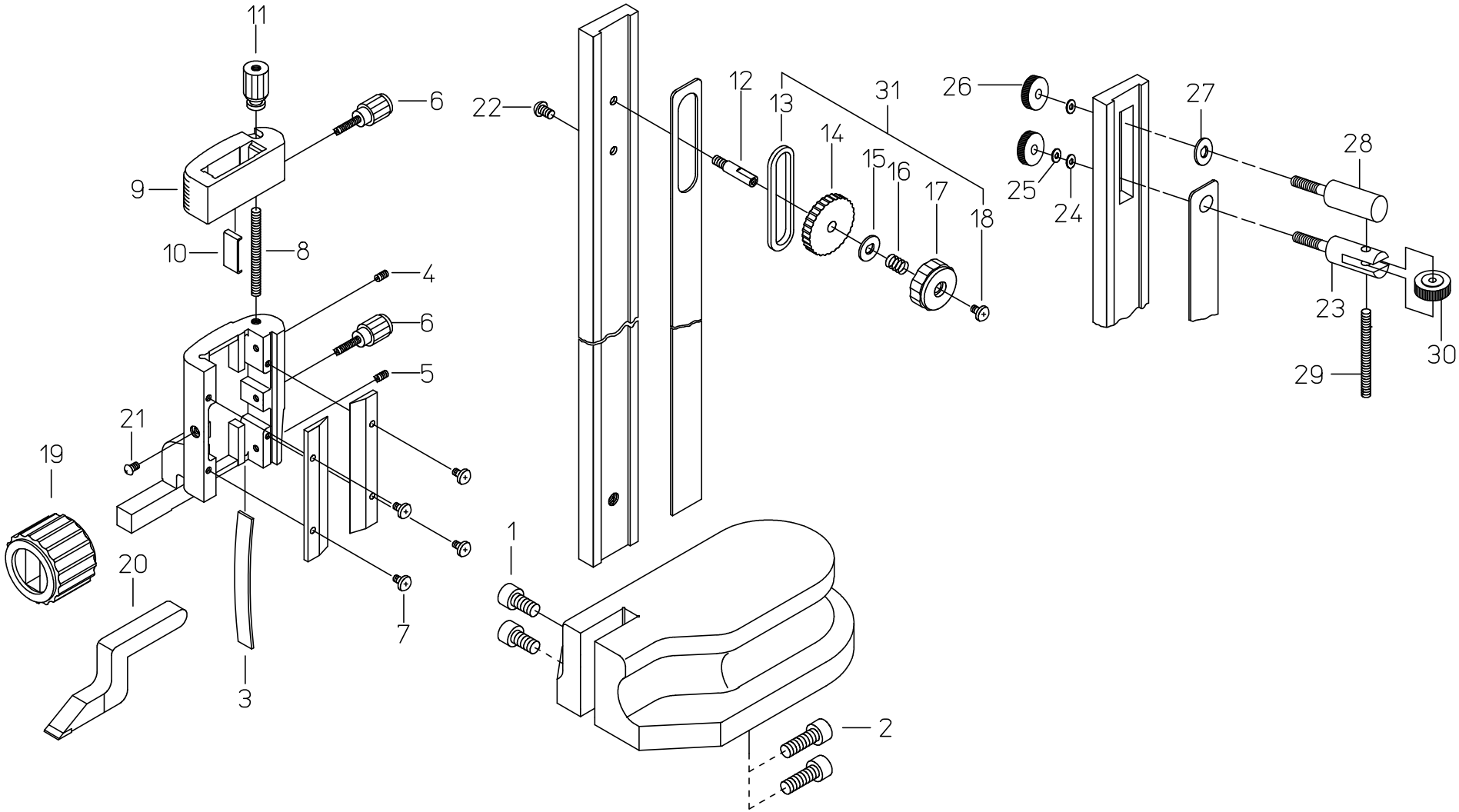
11
6
22
12
13
31
26
27
9
14
15
16
17
18
25
24
28
10
8
4
6
5
23
30
29
21
19
20
7
3
1
2

書類NO, 514-05

KEY NO,	ブヒンメイ	PART NAME	販売区分 CATEGORY	CODE NO, コードNO, 514-108 HS-100	514-109 HS-40"					備考 COMMENTS
1	ﾛｯｶｸｱﾅﾂｷﾎﾞﾙﾄ	SCREW, BASE		07GAA077						
2	ﾛｯｶｸｱﾅﾂｷﾎﾞﾙﾄ	SCREW, BASE		101880						
3	ｲﾀﾊﾞﾈ	GIB, SLIDER		111821						
4	ｾｯﾄﾈｼﾞ	SCREW, GIB SETTING		134577						
5	ｵｼﾈｼﾞ	SCREW, GIB PRESSING		134581						
6	ｸﾗﾝﾌﾟﾈｼﾞ	CLAMP, SLIDER		07GAA068						
7	ｼﾞｭｳｼﾞﾅﾍﾞｺﾈｼﾞ	SCREW, PLATE		07GAA012						
8	ｵｸﾘﾈｼﾞ	SCREW, FINE ADJ.		134597						
9	ｵｸﾘﾊﾞｺ	CARRIER		07GAA029						
10	ｵｸﾘﾊﾞｺｲﾀﾊﾞﾈ	GIB, CARRIER		07GAA074						
11	ｵｸﾘｸﾞﾙﾏ	NUT, FINE ADJ.		07GAA006						
12	ｼｬﾌﾄ	SHAFT		-						
13	ﾗｯｸ	RACK, BLADE FINE ADJ.		-						
14	ﾋﾟﾄﾞｳﾊｸﾞﾙﾏ	PINION. BLADE FINE ADJ.		-						
15	ﾜｯｼｬ	WASHER		-						
16	ｽﾌﾟﾘﾝｸﾞ	SPRING		-						
17	ﾅｯﾄ	NUT, BLADE CLAMP		-						
18	ｼﾞｭｳｼﾞﾄﾗｽﾈｼﾞ	SCREW, STOPPER		-						
19	ｽｸﾗｲﾊﾞｸﾗﾝﾌﾟ	CLAMP, SCRIBER		07GZA002						
20	ｽｸﾗｲﾊﾞ	SCRIBER		905200						
21	ｼﾞｭｳｼﾞﾅﾍﾞｺﾈｼﾞ	SCREW		124667						
22	ｼﾞｭｳｼﾞﾅﾍﾞｺﾈｼﾞ	SCREW, STOPPER SLIDER		-						
23	ｱﾝﾅｲｼﾞｸ	STUD, BLADE FINE ADJ		140939						
24	ﾜｯｼｬ	WASHER, BLADE CLAMP		111985						
25	ｽﾌﾟﾘﾝｸﾞﾜｯｼｬ	WASHER, SPRING		111986						
26	ｸﾗﾝﾌﾟﾅｯﾄ	NUT, BLADE CLAMP		140938						
27	ﾜｯｼｬ	WASHER		-						
28	ｺﾃｲｼﾞｸ	STUD, BLADE POSITIONING		140940						
29	ｵｸﾘﾈｼﾞ	SCREW, FINE ADJ.		134595						
30	ｵｸﾘｸﾞﾙﾏ	NUT. BLADE FINE ADJ.		140938						
31	ﾎﾝｼﾞｬｸｲﾄﾞｳﾌﾟ ｷｯﾄNo.	KIT NO (BLADE FINE ADJ)		-						

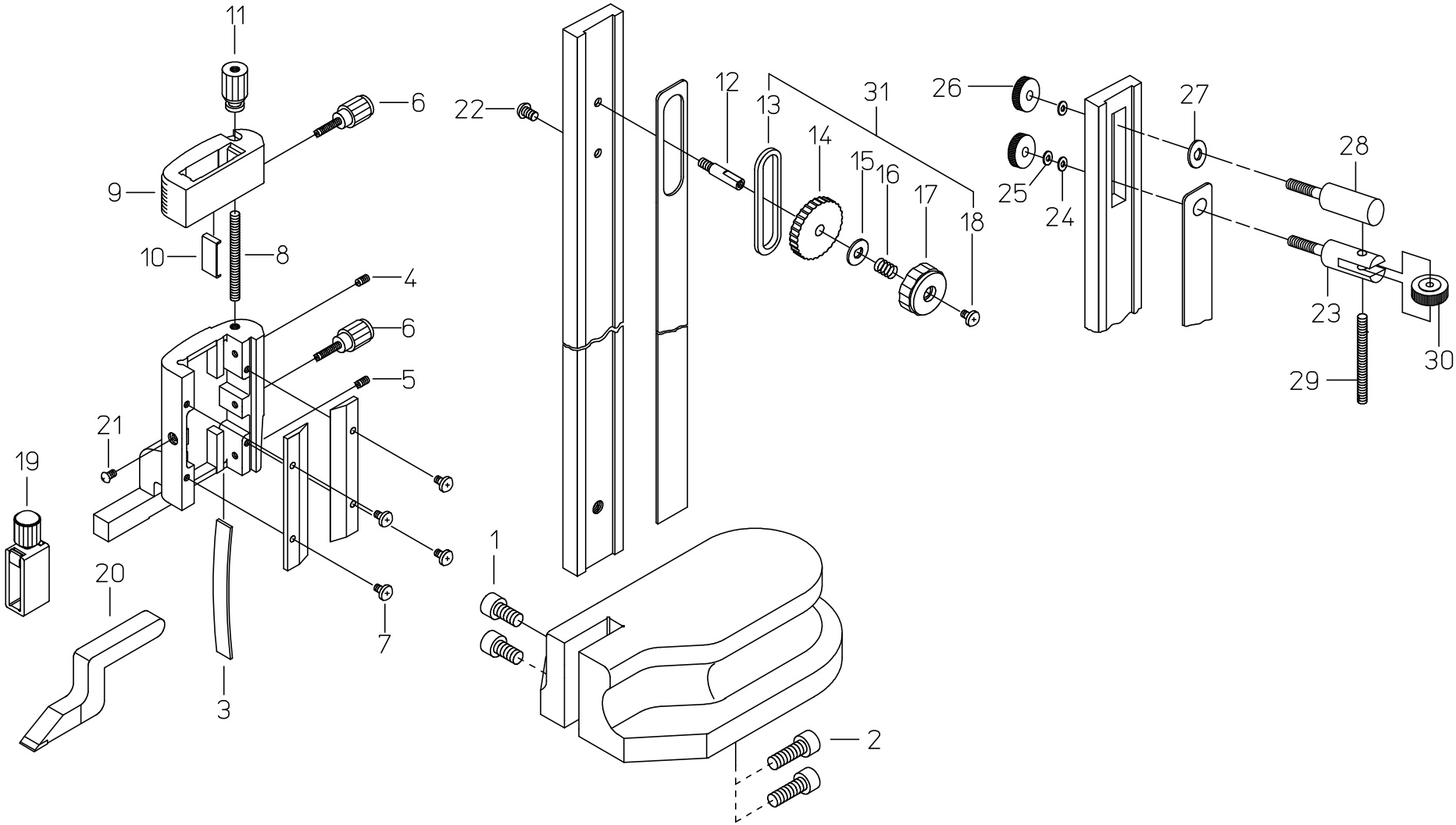
11
6
22
12
13
31
26
27
14
15
16
17
18
25
24
28
9
10
8
4
6
5
23
30
29
21
19
20
7
3
1
2

書類NO, 514-05

KEY NO,	ブヒンメイ	PART NAME	販売区分 CATEGORY	CODE NO, コードNO, 514-108 HS-100	514-109 HS-40"					備考 COMMENTS
1	ﾛｯｶｸｱﾅﾂｷﾎﾞﾙﾄ	SCREW, BASE		07GAA077						
2	ﾛｯｶｸｱﾅﾂｷﾎﾞﾙﾄ	SCREW, BASE		101880						
3	ｲﾀﾊﾞﾈ	GIB, SLIDER		111821						
4	ｾｯﾄﾈｼﾞ	SCREW, GIB SETTING		134577						
5	ｵｼﾈｼﾞ	SCREW, GIB PRESSING		134581						
6	ｸﾗﾝﾌﾟﾈｼﾞ	CLAMP, SLIDER		07GAA068						
7	ｼﾞｭｳｼﾞﾅﾍﾞｺﾈｼﾞ	SCREW, PLATE		07GAA012						
8	ｵｸﾘﾈｼﾞ	SCREW, FINE ADJ.		134597						
9	ｵｸﾘﾊﾞｺ	CARRIER		07GAA029						
10	ｵｸﾘﾊﾞｺｲﾀﾊﾞﾈ	GIB, CARRIER		07GAA074						
11	ｵｸﾘｸﾞﾙﾏ	NUT, FINE ADJ.		07GAA006						
12	ｼｬﾌﾄ	SHAFT		-						
13	ﾗｯｸ	RACK, BLADE FINE ADJ.		-						
14	ﾋﾟﾄﾞｳﾊｸﾞﾙﾏ	PINION. BLADE FINE ADJ.		-						
15	ﾜｯｼｬ	WASHER		-						
16	ｽﾌﾟﾘﾝｸﾞ	SPRING		-						
17	ﾅｯﾄ	NUT, BLADE CLAMP		-						
18	ｼﾞｭｳｼﾞﾄﾗｽﾈｼﾞ	SCREW, STOPPER		-						
19	ｽｸﾗｲﾊﾞｸﾗﾝﾌﾟ	CLAMP, SCRIBER		05GZA033						
20	ｽｸﾗｲﾊﾞ	SCRIBER		905200						
21	ｼﾞｭｳｼﾞﾅﾍﾞｺﾈｼﾞ	SCREW		124667						
22	ｼﾞｭｳｼﾞﾅﾍﾞｺﾈｼﾞ	SCREW, STOPPER SLIDER		-						
23	ｱﾝﾅｲｼﾞｸ	STUD, BLADE FINE ADJ		140939						
24	ﾜｯｼｬ	WASHER, BLADE CLAMP		111985						
25	ｽﾌﾟﾘﾝｸﾞﾜｯｼｬ	WASHER, SPRING		111986						
26	ｸﾗﾝﾌﾟﾅｯﾄ	NUT, BLADE CLAMP		140938						
27	ﾜｯｼｬ	WASHER		-						
28	ｺﾃｲｼﾞｸ	STUD, BLADE POSITIONING		140940						
29	ｵｸﾘﾈｼﾞ	SCREW, FINE ADJ.		134595						
30	ｵｸﾘｸﾞﾙﾏ	NUT. BLADE FINE ADJ.		140938						
31	ﾎﾝｼﾞｬｸｲﾄﾞｳﾌﾟ ｷｯﾄNo.	KIT NO (BLADE FINE ADJ)		-						

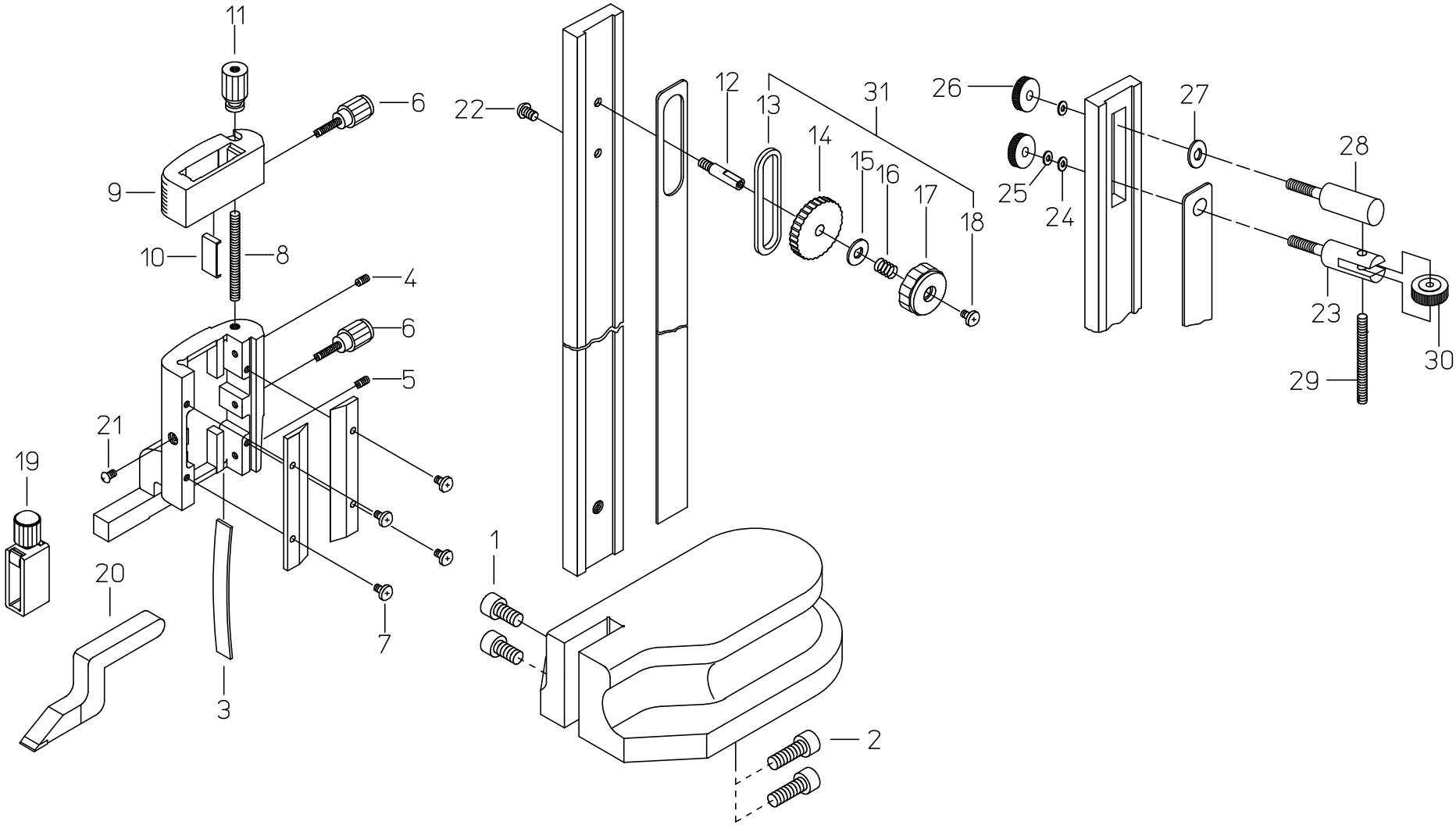
11
6
22
12
13
31
26
27
14
15
16
17
18
25
24
28
9
10
8
4
6
5
23
30
29
21
19
20
7
3
1
2

書類NO, 514-05

KEY NO,	ブヒンメイ	PART NAME	販売区分 CATEGORY	CODE NO, コードNO, 514-108 HS-100	514-109 HS-40"		備考 COMMENTS
1	ﾛｯｶｸｱﾅﾂｷﾎﾞﾙﾄ	SCREW, BASE		07GAA077			
2	ﾛｯｶｸｱﾅﾂｷﾎﾞﾙﾄ	SCREW, BASE		101880			
3	ｲﾀﾊﾞﾈ	GIB, SLIDER		111821			
4	ｾｯﾄﾈｼﾞ	SCREW, GIB SETTING		134577			
5	ｵｼﾈｼﾞ	SCREW, GIB PRESSING		134581			
6	ｸﾗﾝﾌﾟﾈｼﾞ	CLAMP, SLIDER		05HAA205			
7	ｼﾞｭｳｼﾞﾅﾍﾞｺﾈｼﾞ	SCREW, PLATE		07GAA012			
8	ｵｸﾘﾈｼﾞ	SCREW, FINE ADJ.		134597			
9	ｵｸﾘﾊﾞｺ	CARRIER		07GAA029			
10	ｵｸﾘﾊﾞｺｲﾀﾊﾞﾈ	GIB, CARRIER		07GAA074			
11	ｵｸﾘｸﾞﾙﾏ	NUT, FINE ADJ.		07GAA006			
12	ｼｬﾌﾄ	SHAFT		-			
13	ﾗｯｸ	RACK, BLADE FINE ADJ.		-			
14	ﾋﾟﾄﾞｳﾊｸﾞﾙﾏ	PINION. BLADE FINE ADJ.		-			
15	ﾜｯｼｬ	WASHER		-			
16	ｽﾌﾟﾘﾝｸﾞ	SPRING		-			
17	ﾅｯﾄ	NUT, BLADE CLAMP		-			
18	ｼﾞｭｳｼﾞﾄﾗｽﾈｼﾞ	SCREW, STOPPER		-			
19	ｽｸﾗｲﾊﾞｸﾗﾝﾌﾟ	CLAMP, SCRIBER		05GZA033			
20	ｽｸﾗｲﾊﾞ	SCRIBER		905200			
21	ｼﾞｭｳｼﾞﾅﾍﾞｺﾈｼﾞ	SCREW		124667			
22	ｼﾞｭｳｼﾞﾅﾍﾞｺﾈｼﾞ	SCREW, STOPPER SLIDER		-			
23	ｱﾝﾅｲｼﾞｸ	STUD, BLADE FINE ADJ		140939			
24	ﾜｯｼｬ	WASHER, BLADE CLAMP		111985			
25	ｽﾌﾟﾘﾝｸﾞﾜｯｼｬ	WASHER, SPRING		111986			
26	ｸﾗﾝﾌﾟﾅｯﾄ	NUT, BLADE CLAMP		140938			
27	ﾜｯｼｬ	WASHER		-			
28	ｺﾃｲｼﾞｸ	STUD, BLADE POSITIONING		140940			
29	ｵｸﾘﾈｼﾞ	SCREW, FINE ADJ.		134595			
30	ｵｸﾘｸﾞﾙﾏ	NUT. BLADE FINE ADJ.		140938			
31	ﾎﾝｼﾞｬｸｲﾄﾞｳﾌﾟ ｷｯﾄNo.	KIT NO (BLADE FINE ADJ)		-			